HMF	TECHNICAL INFORMATION, 340 SERIES	4	3	05020
	Lifting capacity diagram, 340 K1	Page:	1 (1)	
		Date:	23.02.05	

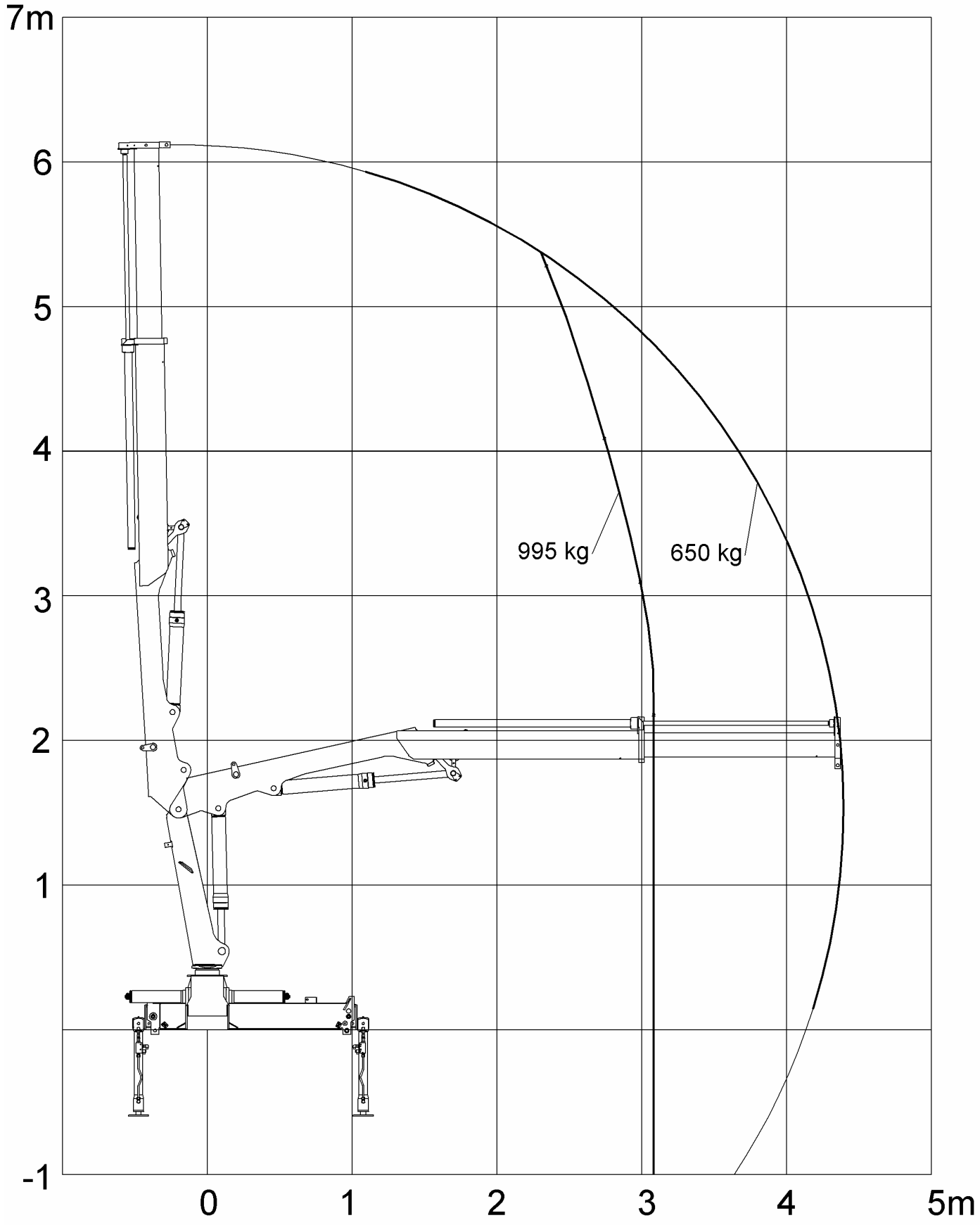

We reserve the right to introduce improvements and modifications

HMF	TECHNICAL INFORMATION, 340 SERIES	4	3	05021
	Lifting capacity diagram, 340 K2	Page: 1 (1)		
		Date: 23.02.05		

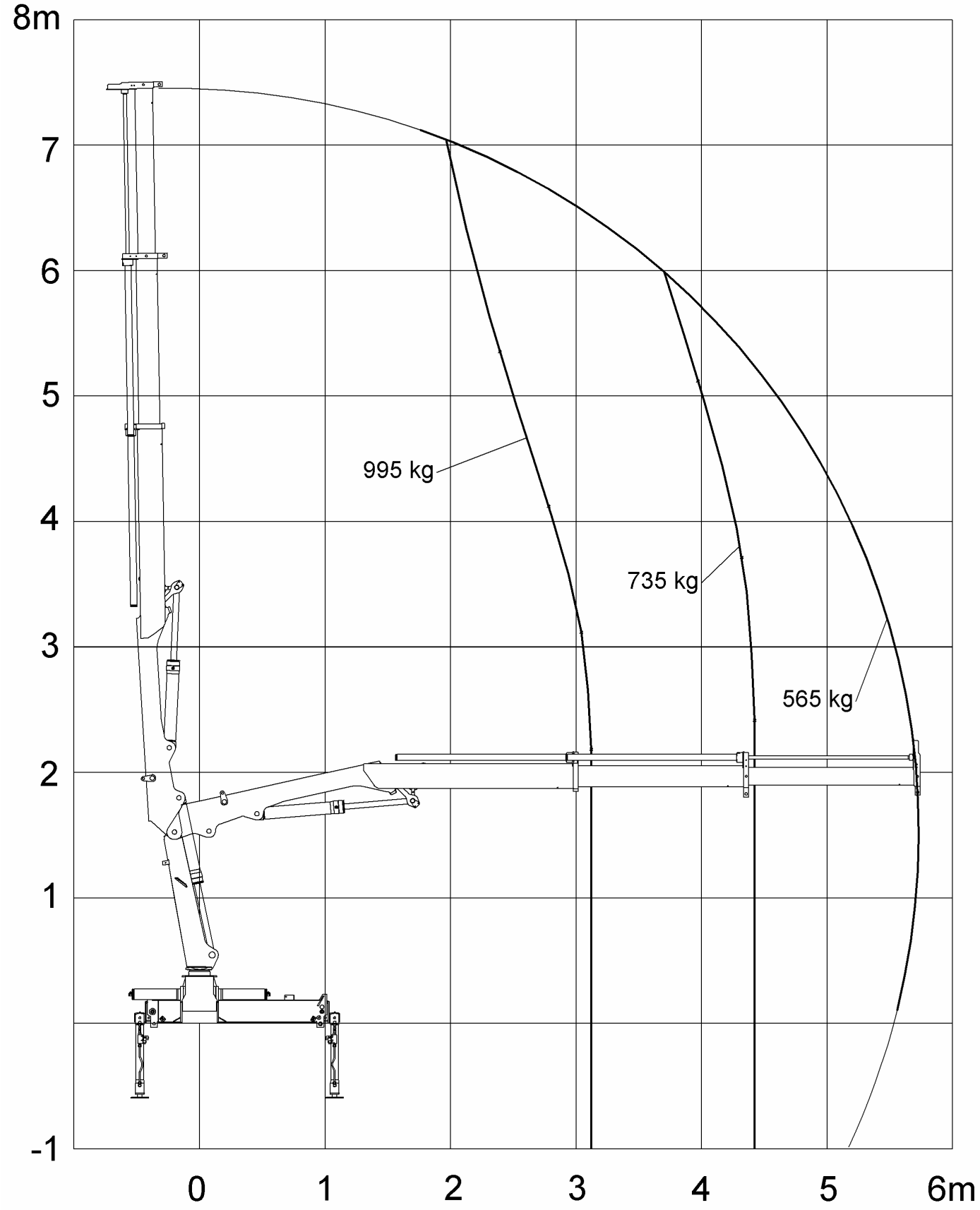

We reserve the right to introduce improvements and modifications

HMF	TECHNICAL INFORMATION, 340 SERIES	4	3	05022
	Lifting capacity diagram, 340 K3	Page:	1 (1)	
		Date:	23.02.05	

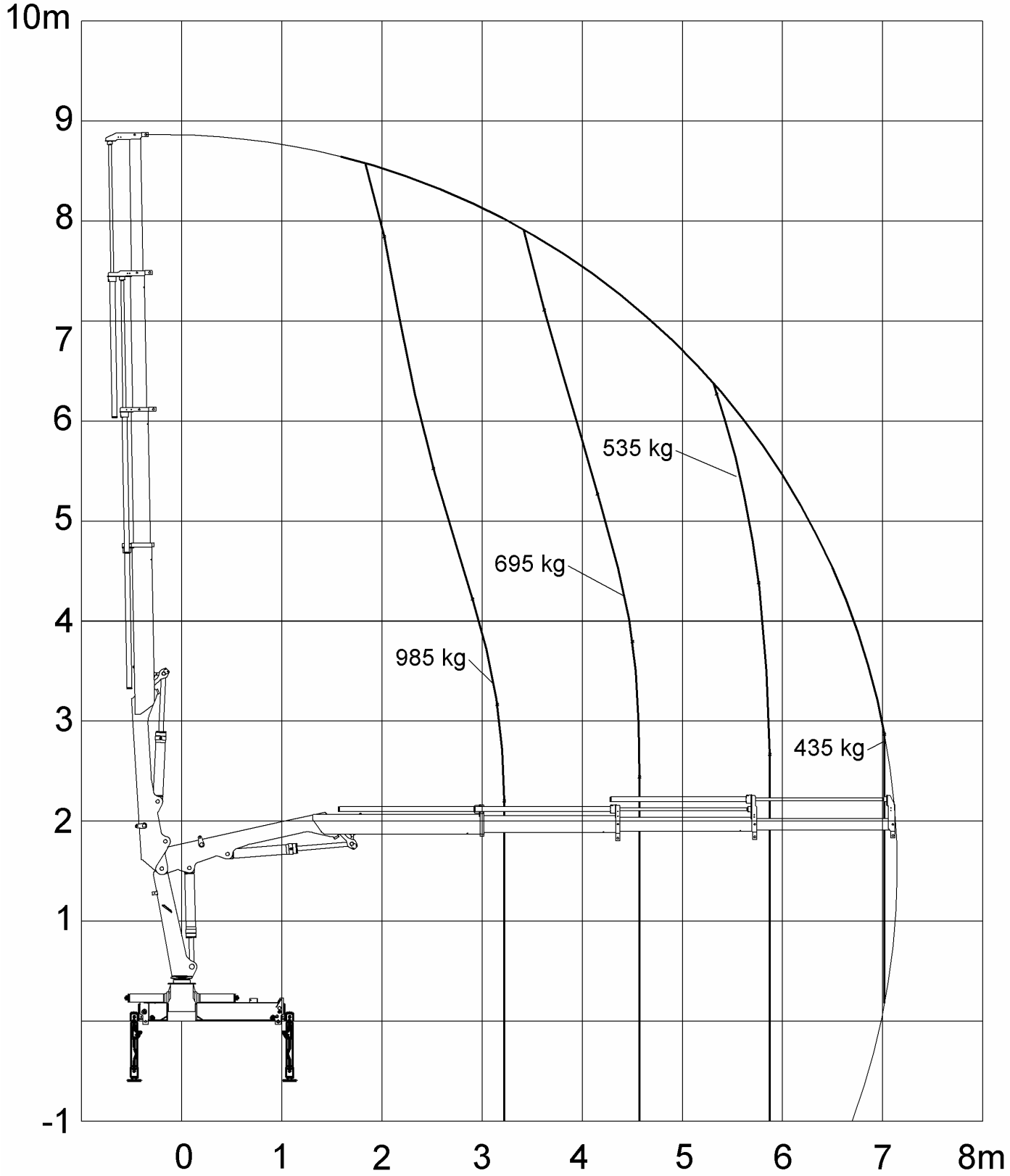

We reserve the right to introduce improvements and modifications